THE NEW INFRARED ROAD SITE TRANSMITTER BRINGS ISO CALM ON THE STREET

Andreas Schalk, Hannes Stratil
{ a.schalk, h.stratil}@efkon.com

Tel: +43 (0)316 695675 – 0

EFKON AG
Andritzer Reichsstrasse 66
8045 Graz
AUSTRIA

ABSTRACT

The family of International Standards for CALM (Communication Architecture for Land Mobile environment) are the new ISO-Standards for car-to-car and car-to-infrastructure communication. While Cellular or Metropolitan Area Networks contributes the WAN-connectivity covers Microwave-LANs the mid-range. Infrared adds finally the capability to communicate in predefined directions and to detect the communication-distance to the partner by time-of-light measurement.

An essential key requirement of future ITS communication is the ability to set up "ad-hoc connections" and to transmit KBytes of data in a few milliseconds. The most crucial and time-consuming part in a multinode environment is the link-setup procedure, especially in a free space situation with unpredictable and fast changing link conditions. Infrared communication has outstanding capabilities to shape communication zones according user-requirements, features high data rate for up- and download, and offers, due to the beaming characteristics, high reliability and protection of privacy.

Due to the participation of EFKON in the European project CVIS and COOPERS, Infrared equipment will be installed in vehicles and mounted on gentries at several test sites in Europe. Technique and functionality of the Infrared equipment will be announced in this document.

INFRARED ROADSIDE TRANSMITTER

The new Infrared roadside transmitter (Figure 1) will be used in the European projects as a standard unit for the communication between vehicles and infrastructure. Figure 2 illustrates the three lane standard configuration used on highways. During the European projects, EFKON will perform several tests and demonstrations with this equipment in 2008 and 2009.

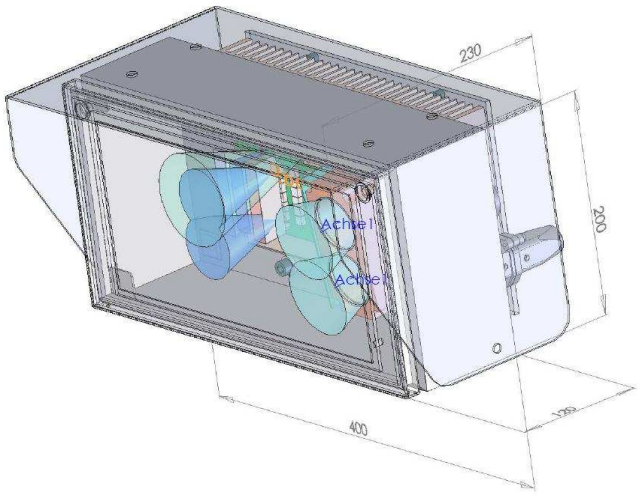

Figure 1. Infrared Roadside Transmitter

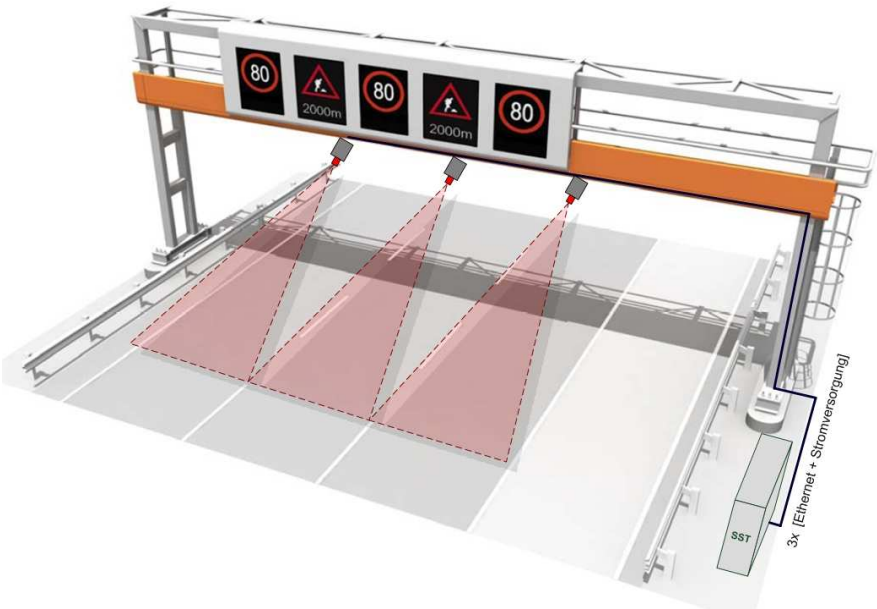

Figure 2. Standard Implementation on Motorways

THE ISO TC204 WG16 CALM STANDARDIZATION

The CALM-group creates and standardizes an automotive, wireless and media-spanning communication environment. CALM (Continuous air interface, long and medium range) is part of the ISO-standardization-program (TC204-WG16). The ultimate target is, to provide automatically the most appropriate communication-medium to the user. The deployment scenario for the CALM communication can be seen in Figure 3. The CALM-program standardizes also the necessary networking, switching and management functionality.

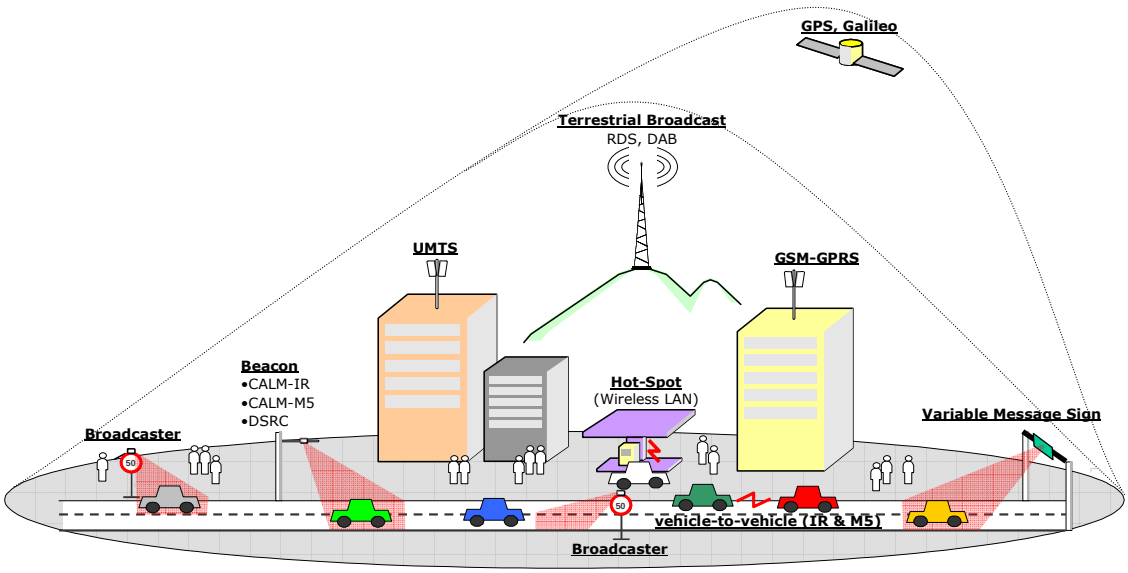

Figure 3. The CALM Deployment Scenario

The work on CALM was started in 2001. The CALM standard for vehicle communication systems comprises the standards for communication via Microwave at 5,8/5,9 GHz, Infrared, Cellular 2G/3G, and MM-Wave at 60 GHz. Figure 4 shows the complete CALM architecture stack as described in ISO Standard 21217. The different air interfaces are designed to provide broadcasts, point-to-point, vehicle-to-vehicle, and vehicle-to-point communication. The goal of CALM is an efficient architecture for vehicle communication systems, which can serve the needs of various applications. Examples are electronic vehicle identification, safety systems, or satellite based road pricing and enforcement.

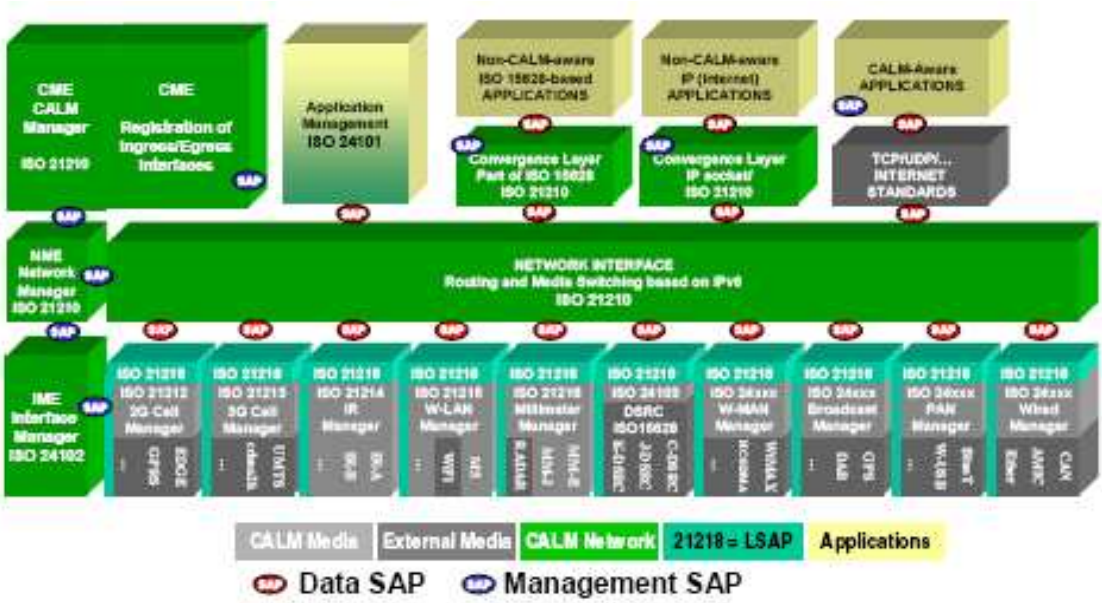

Figure 4. CALM architecture stack

The fast movement of information across the longer distances uses wireless technology is functionally very different form the requirements definition for dedicated short range communication (DSRC). High volumes of data are required for purposes such as traffic information and management, video downloads to vehicles for tourist information and entertainment, and navigation system updates, etc. In order to support such services, transmitters need to be able to operate over long or medium range, and to be able to hand over a session from one transmitter to another. The CALM Standards are designed to enable quasi-continuous communications between vehicles and service providers. The characteristics of the complementary CALM media can be found in Table 1.

	Cellular (GSM/UMTS)	CALM-IR ISO21214	CALM-M5 ISO21215
Type	Long-Distance	Medium	Medium
Communication Range	300m to 35km	100m	300m
Transmission	Bidirectional	Bidirectional and Broadcast	Bidirectional and Broadcast
Access type	Point-to-Multipoint	Point-to-point and Point-to-Multipoint	Point-to-Multipoint
Data-Speed	9.6kBit/s 144kBit/s (driving car) 384kBit/s (walker) 2,048Mbit/s (static)	1…128Mbit/s	5…54Mbit/s
Connection-Speed	low or continuous	very fast	medium to fast
Repetition Time	Minutes	256µs to 65ms	10ms
Frequency Band / Wavelength	900 to 1800MHz 1885 to 2025 MHz 2119 to 2200MHz	870nm	5.8 GHz
Velocity of mobile station	260km/h	260km/h	260km/h
Management	Central	Local	Local

Table 1. Communication media

The advantages of the combination of the different media in the CALM communication world are shown in Figure 5.

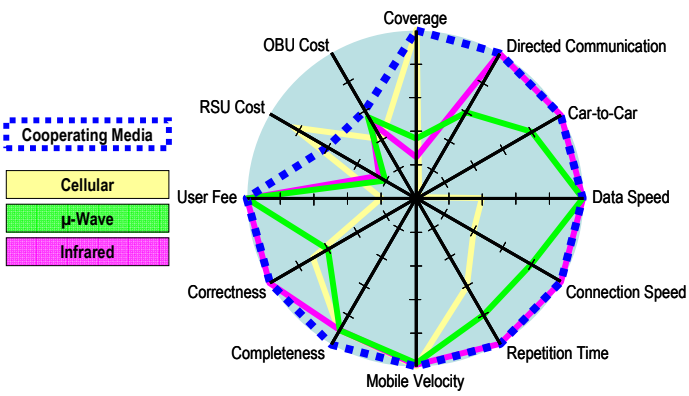

Figure 5. Combined features of CALM communication media

- Long distance communication: **GPRS, UMTS**
- Short/medium distance omni- & semi directional: **Microwave 5.9 GHz**
- Short/medium distance directional: **Infrared, MM-Wave**

ISO-CALM INFRARED

ISO CALM-IR describes the air interface using infrared systems at 800 to 1000 nm and provides the protocol and parameters for medium range, medium to high speed wireless communications in the ITS sector using infrared systems.

CALM-Infrared offers:

- Active communication
- Operating range in excess of 100 meters
- High useful net-data rate
- Multi-beam directional capability

ISO TC 204 (Infrared) allows the coordination of data streams from several directions (beams, see Figure 6). A TDMA protocol is used to handle several communication partners in each direction.

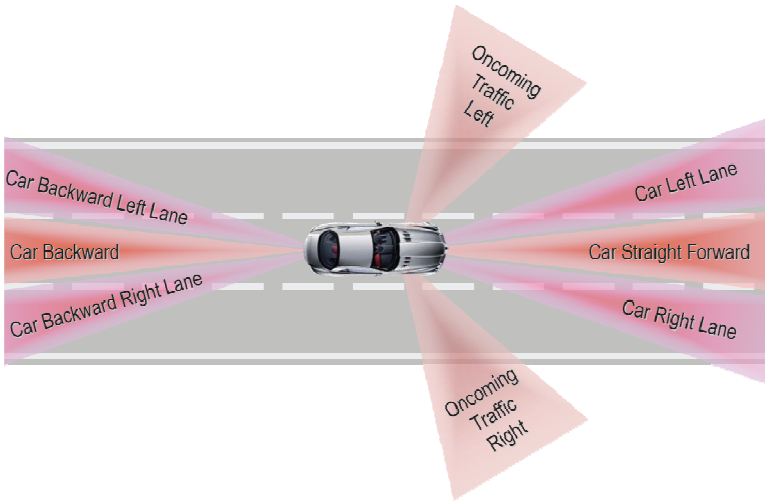

Figure 6. Beams defined in ISO-CALM IR

The use of several directed beams in a car gives a lot of advantages. Beams to the front right/left are used for traffic information like road signs, beams to the side right/.left for car-to-car communication with the oncoming traffic. The overhead beams are used for tolling applications and payment at petrol stations or similar.
The other beams (front, back) are intended to be used for communication with other cars. This offers a variety of useful communication applications.

BEAMING AND SHAPING

Infrared has excellent beam-shaping characteristics. Easily you can have a narrow or wide, sharp or blurred beam, depending on the application. With just a few optical devices and infrared you can form beams with sharp edges for excellently defined communication zones like in the German truck tolling system.

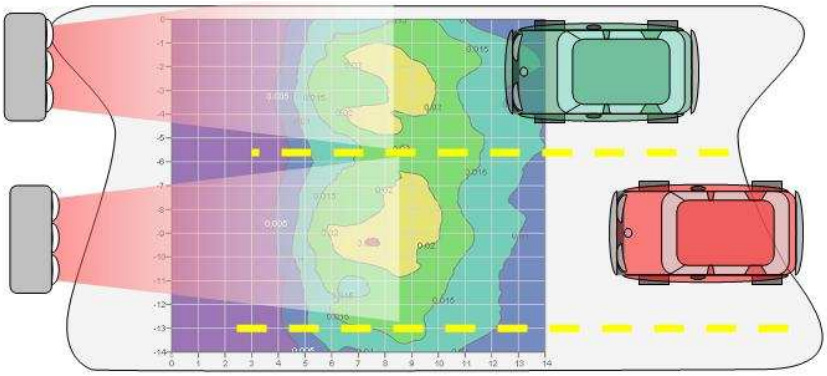

Figure 7. Lane Selectivity, Infrared Transmitter

NON INTERFERING BEAMS - HIGH DATA RATE

Infrared does not have interference problems like other media. The non-interfering beams allow a very efficient use of bandwidth resulting in a high net data rate on each CALM-IR channel.

ADVANTAGES OF INFRARED:

Infrared …
- … enables directed communication.
- … provides very fast link-setup (< 10ms).
- … has excellent focusing and beam-shaping capabilities.
- … enables cost-efficient multi-beam antennas for controlled directivity (equated with knowledge of direction of the communicating party).
- … defines communication zones with sharp cut-off boundary.
- … supports multiple links within a communication zone, independently of each other
- … offers very high bandwidth.
- … supports requirements for few milliseconds latencies and communication delays.
- … supports distance estimation of the communicating party, with few meters accuracy.
- … provides net throughput close to nominal throughput.
- … exhibits nearly no EMC-problems.
- … communication has much less problems with „metal-coated“ windscreens than microwave.
- … provides interference-free communication.
- … has a license-free wireless spectrum.

FEATURES OF CALM-IR

ADAPTABLE TRANSMISSION-SPEED

Data rates of 1, 2, 8, 16, 32, 64, 128 and in future 512 Mbit/s (1 Mbit/s = Base rate, 2 Mbit/s = Default rate) are possible. The speed can be adapted when signal to noise ratio (S/N) is changing, in both cases, if S/N becomes worse as well if it becomes better. Each communication device is able to communicate with all lower speeds in order to achieve downwards compatibility with “low-speed” devices (at least with “Base rate” and “Default rate”). The data transmission speed is negotiated at the set-up of the link and can be changed during the communication session.

FLEXIBLE MODULATION

The modulation schemes of infrared communication are optimized for the different data transmission speeds proposed by the CALM-IR standard.

FAST LINK SETUP

The TDMA Schema of CALM-IR enables a very fast link set-up. The protocol establishes a new communication link, exchanges data on this link, and closes the link within only one frame. Furthermore CALM-IR provides a very fast link re-establishment within one frame after short break-outs.

ERROR PROTECTED COMMANDS BUILD A RUGGED CONNECTION ALSO UNDER BAD TRANSMISSION CONDITIONS

The information bits of the data packets are protected by Error Correction Bits (EC_0, EC_1, EC_2, EC_3). A modified Hamming Code is used with length L=12 and a Hamming-Distance of min. D=3. During transmission the data bits in the sequence D_0, D_1, D_2, D_3, D_4, D_5, D_6, D_7 are always transmitted first, followed by the error correction bits EC_0 to EC_3

BASICS OF CALM-IR

The CALM-IR standard defines a TDMA scheme as media access method for synchronized communication of multiple communication partners. In a communication environment with two or more communication partners there exists exact one master, which controls the organization of the TDMA sequence. If no dedicated master exists, a procedure is provided to establish a new master. Direct “slave to slave” communications requires that one of the slaves acts as a temporary master.

The CALM IR-frame consists of N_{frame} time slots and is defined and organized by the master. The framing structure is defined by reserved signals which never can occur in a data stream. This allows simple detection circuitry without the necessity to constantly supervise and analyze the data stream.

TDMA-FRAME

The CALM-IR TDMA frame is generated by the master and starts with a specific frame synchronization signal (F-Sync) and is subdivided into several timeslots. The maximum length of the frame is 256 time slots. The CALM-IR TDMA frame is subdivided in communication windows, and each frame contains at least one window.

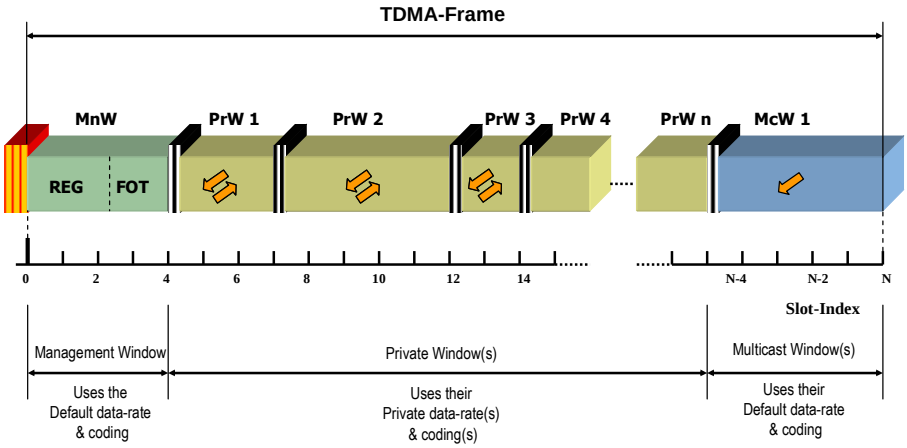

Figure 8. CALM IR TDMA Frame

Each window is initiated by a specific window synchronization signal (W-Sync). The maximum number of windows within one frame is a dynamic parameter and depends on the size of the windows. The first window of a CALM-IR TDMA frame is always the management window.

SYNCHRONIZATION PATTERN

The frame synchronization signal is generated by the master at the beginning of a frame and initiates the management window. All active slaves not being in a "transmit state" are ready to recognize a F-Sync signal. A frame synchronization signal can also interrupt frames in progress for example to prioritized emergency messages.

A Frame-Sync never is sent directly after a "receive state" of the master. In such case a guard interval of 5µs is inserted before the sending of the Frame-Sync to allow the receiver circuitry of all slaves to re-settle.

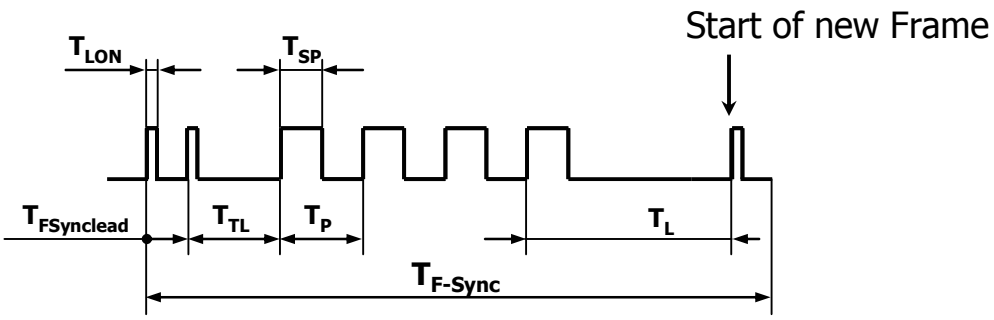

Figure 9. Frame Synchronization signal (F-Sync)

The window synchronization signal starts all other kinds of windows (Private / Multicast / Broadcast and Compatibility Windows).

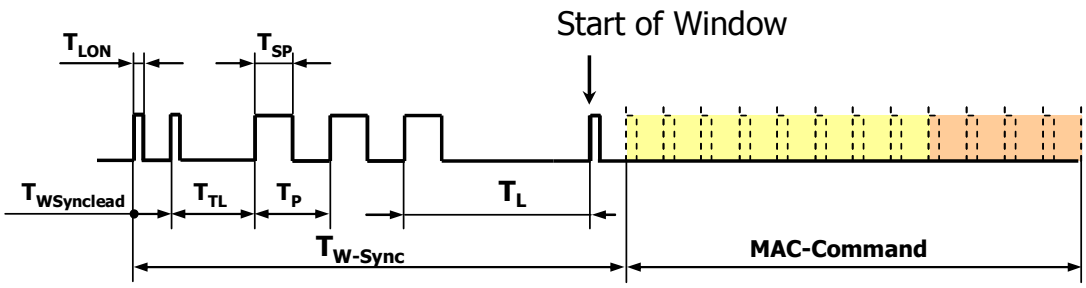

Figure 10. Window Synchronization signal (W-Sync)

The W-Sync signal can be slightly asynchronous in respect to the time-slot. For that reason, the slave is activated a certain time before the timeslot starts. The Window-Sync is always followed by a MAC-Command.

CONCLUSION

The ISO CALM Infrared Standard (ISO 21214) is a new ISO Standard for car-to-car and car-to-infrastructure communication. The Infrared Standard was finished in 2005 and is the first completed Standard of the CALM (Continuous air interface, long and medium range) standards family. ISO CALM-IR describes the air interface using Infrared systems at 800 to 1000 nm and provides the protocol and parameters for medium range, medium to high speed wireless communication.

In 2004, Efkon AG (www.efkon.com) started the development of the first single chip semiconductor product which has implemented this new standard. First silicon production started in January 2007, and the first chips are available since March 2007. This CALM Infrared ASIC will be available from several independent sources, as an off-the-shelf product component. Distribution channels will be e.g. Efkon and ST-Microelectonics.

Since June 2008, the first off-the-shelf CALM IR components for the installation in vehicles, on pillars, and on gentries are available. The CALM IR components form the basis for modern ITS systems and applications in Europe, Asia, and US.

REFERENCES

(1) International Standard ISO 21214. Intelligent transport systems – Continuous air interface, long and medium range (CALM) – Infrared systems. July 2006